DIGITAL ASSIGNMENT-5

NAME: SUJAL SRIVASTAVA

REG. NO: 20BME0699

Aim : To design and draft a bench vise using Fusion 360.

Procedure :

1. Open a new design and select Create Sketch option. Proceed to select the front plane.
2. Draw the following sketch using Line tools and Sketch Dimensions to give the required dimensions.
3. Using Extrude (E key), extrude the above sketch. Set direction to Symmetric and Measurement to Whole Length. Set thedistance to 64 units.
4. Select the rectangular face of the body and draw the following sketch and extrude upto (144-26) mm.
5. Select the face of the newly extruded part and sketch the following. Now extrude cut upto the opposite end.
6. Again, select the same face and using sketch draw the following, using the circle, arc and tangent commands. Extrude thissketch to –22mm. Set operation to Join.
7. Apply Fillet of 3mm to these 2 edges.
8. Using Offset Plane feature, create a plane offset to the face of the vice body. Set the distance to -(44-32)/2.
9. Select the offset plane and using sketch feature, draw the following (turn on Slice). And use Revolve to get the desired cut.
10. Select Rectangular Pattern option. Set Object Type to Features. Select the recent hole and draw the pattern by dragging thearrows. Set the number to 2 along both axis and set the respective distance between the holes.
11. Similarly, draw the rest of the components and apply the desired joints.

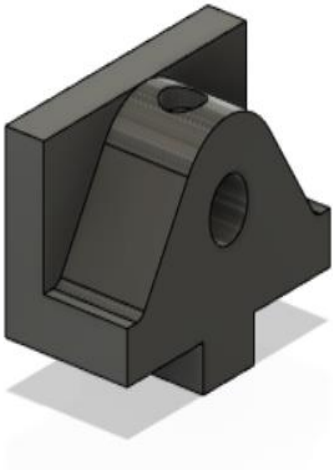

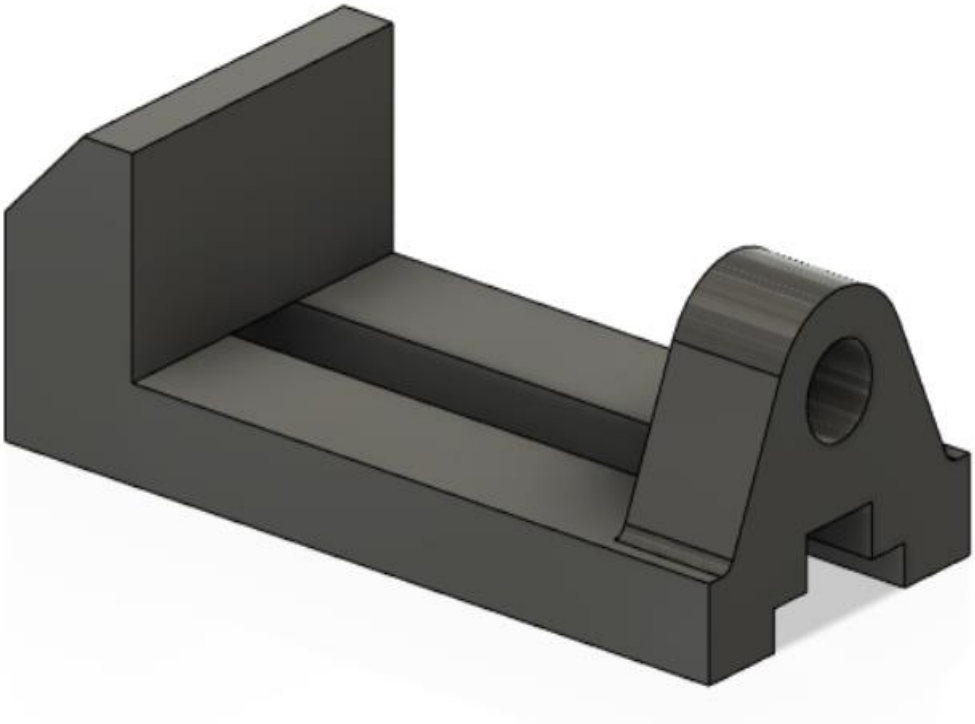

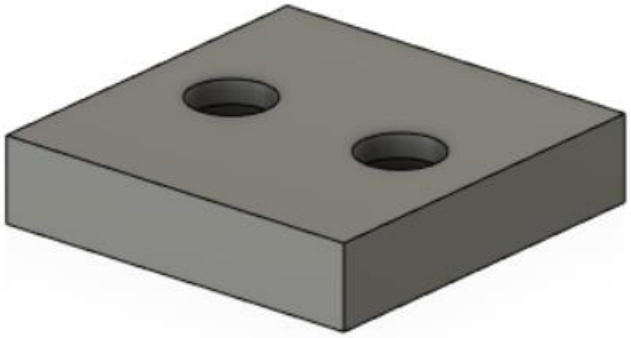

RESULTS:

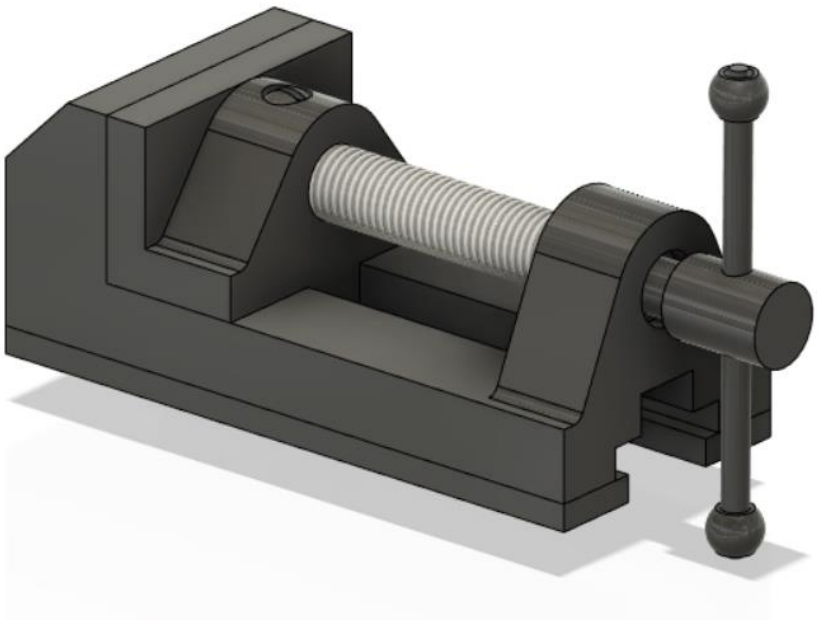

LINK: https://a360.co/3rkfAcR